

DOTD-330

DOTD-330-B

Conventional optical-thermal detector

Description

The conventional photo-thermal detectors of the new 300 Series have been developed using advanced electronic technology to offer a product that is highly compact, robust, and flexible, while updating the elegant design of the previous series with a more modern and refined look.

The new range of conventional photo-thermal smoke detector is available in versions with and without an isolator, and in both black and white. As with the previous series, detectors with custom colors are also available.

The DOTD-330 conventional photo-thermal detectors are based on the combination of an advanced Tindall effect or scattered light detection camera with thermal detection sensors in accordance with EN54-5 and EN54-7. The optical chamber has been carefully designed with precise geometry; its labyrinth structure prevents false alarms caused by air currents while efficiently channeling smoke toward the sensing element. This detector incorporates algorithms that maintain long term stability, to reduce false alarms due accumulated dust contamination over time and simplifying maintenance tasks during this period. The new DPT geometry discriminates against heavier particles, preventing them from entering the chamber and further improving detection reliability.

The DOTD-330 detectors support the configuration of up to 3 profiles and 5 different smoke sensitivity levels , allowing to be easily adapted to the specific requirements of each installation. The DOTD-330 detectors can be configured using the PGD-300C and PGD-300CX programmers.

Profile	Mode	Optical Sensitivity	Smoke Detection	Thermal Detection	Description
1	Optical	Very high	X		Fast response with minimal smoke persistence for activation, ideal for clean areas and earlier alarm detection in smoldering fires
		High	X		Requires lower smoke density and persistence in the chamber.
		Normal	X		Default setting
		Low	X		Requires greater smoke persistence and density in the chamber.
		Very low	X		Requires high smoke persistence in the chamber. Improves response to false alarms caused by very random episodes of dust in the environment.
2	Thermal	----		X	Thermal detection only in Class A2
3	Optical or Thermal	Very high	X	X	Smoke or heat detection. Optical response with very high sensitivity or thermal class A2
		High	X	X	Smoke or heat detection. High-sensitivity optical response or Class A2 thermal response
		Normal	X	X	Smoke or heat detection. Normal optical or Class A2 thermal response. Default setting.
		Low	X	X	Smoke or heat detection. Low optical or thermal response in Class A2
		Very low	X	X	Smoke or heat detection. Very low optical or thermal response in Class A2

The conventional detectors of the 300 series are fully compatible with the Z-200 bases and with any of the Detnov conventional control panels.

Detectors in this series are non-polar, facilitating error-free wiring.

Features and dimensions

- or A sleek, updated design
- o Drift compensation
- o 5 optical sensitivity settings: Very low, low, normal, high, and very high
- o 2-wire connection with no polarity
- o Compatible with any Detnov conventional control panel
- o Can be configured using PGD-300C and PGD-300CX (starting with firmware version 1.17)
- o Usage time counter: Facilitates maintenance as required by the new RIPCI
- o Operating mode: Optical, thermal, or optical and thermal.
- o Configurable LED flashing.

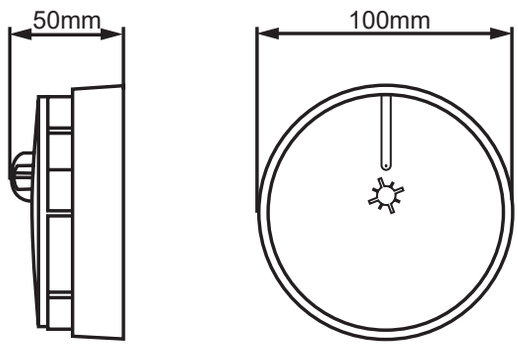

Technical specifications

Detector		
	Loop characteristics: Operating voltage: Standby current: Current consumption during alarm:	 9 to 38 VDC < 300 µA < 35 mA
Wiring		
	2 x 1.5 mm² twisted pair connection to Z-200 base	
Environment		
	Operating temperature:	From -10°C to 60°C
	Relative humidity:	95% non-condensing
	IP rating:	IP40
Physical characteristics		
	Head (height x diameter):	40 mm x 100 mm
	Base (height x diameter):	5 mm x 100 mm
	Material:	ABS
	Color: DOTD-330: DOTD-330-B:	 White Black
	Weight:	90 g
Certification		
	EN54-5 (Class A) and EN54-7	
	Certificate No.:	0370-CPR-7622

Accessories



Z-200 and Z-200-B



Z-200-H and Z-200-H-B



STD-200 and STD-200-B



PINTDET



PGD-300C and PGD-300CX



STI-9604



STI-9605